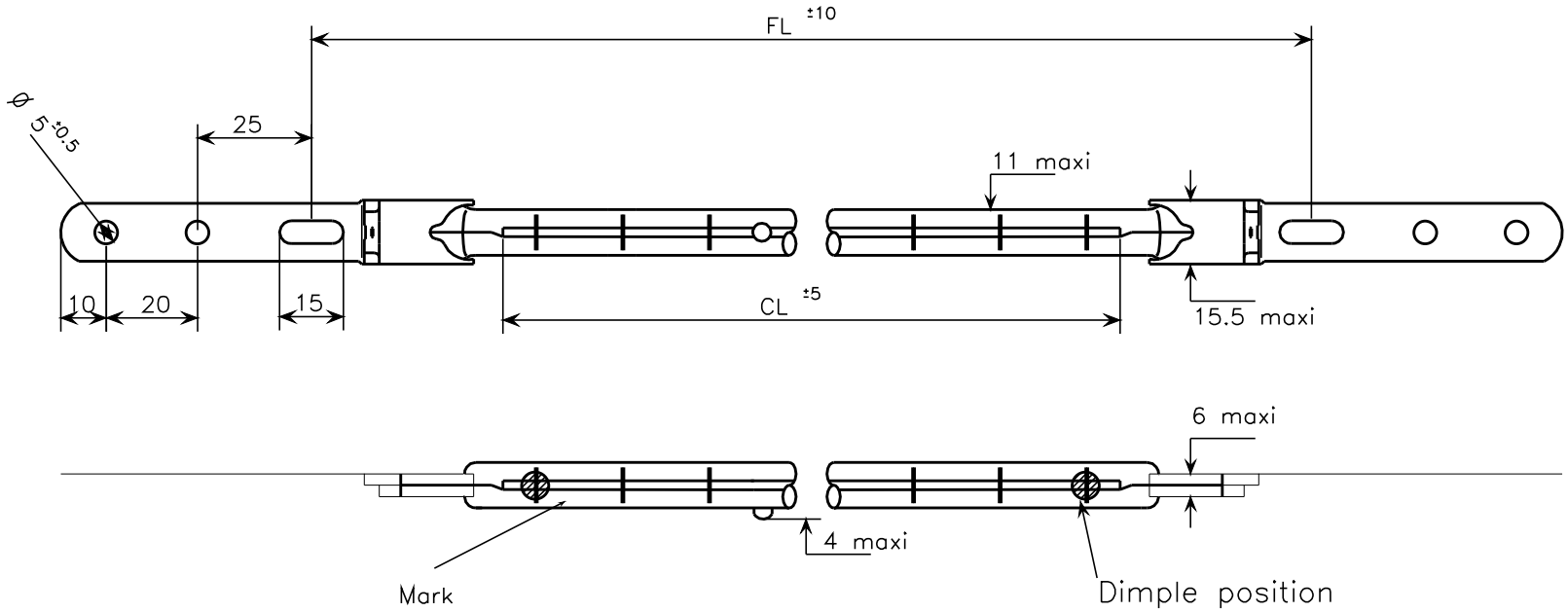

FL	798
CL	700
Mark	DIRTECH + lot DS400V3000W700JU

Flat terminal
Material: Stainless steel
Thickness: 0.25 mm

Dimples: 13 positions

Specifications:
Nominal voltage: 400 V
Wattage: 3000 W ± 5%
Average life: 5000 Hrs (with AC power supply, 50 or 60 Hz, continuously at room temperature and free from vibration)
Lighting position: Universal
Tc 2350°K

Type: InfraRed Halogen Lamp Heater
DS 400V 3000W 700 JU

Modif.:
Date:
Comments

Version IC-347

DIRTECH

Date: 16-10-14